OMP S.p.A.
Via XI Febbraio 18
I-25065 Lumezzane - Italy
VAT No: IT 00628500985

Office and delivery service
Via Industriale, 14 - I-25070 Bione - Italy
+39 0365 897941

omptea.eu - info@omptea.com

208.664.6

PP trap for double sink

DESCRIZIONE DEL PRODOTTO

1. inlet 170×580 × 1"½
2. 2 hose connections
3. outlet L. 300 × ø40
4. PP flange ø78

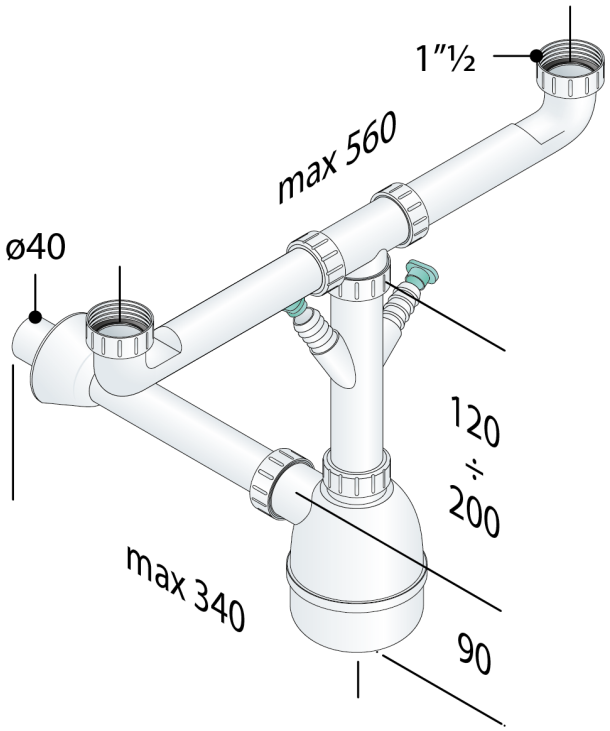

Name	Lybra
Measure	1"½×ø40
Water seal	50
Water volume	70
Certifications	Product in conformity with European standards EN274

OMP S.p.A.
Via XI Febbraio 18
I-25065 Lumezzane - Italy
VAT No: IT 00628500985

Office and delivery service
Via Industriale, 14 - I-25070 Bione - Italy
+39 0365 897941

omptea.eu - info@omptea.com

PHOTO GALLERY