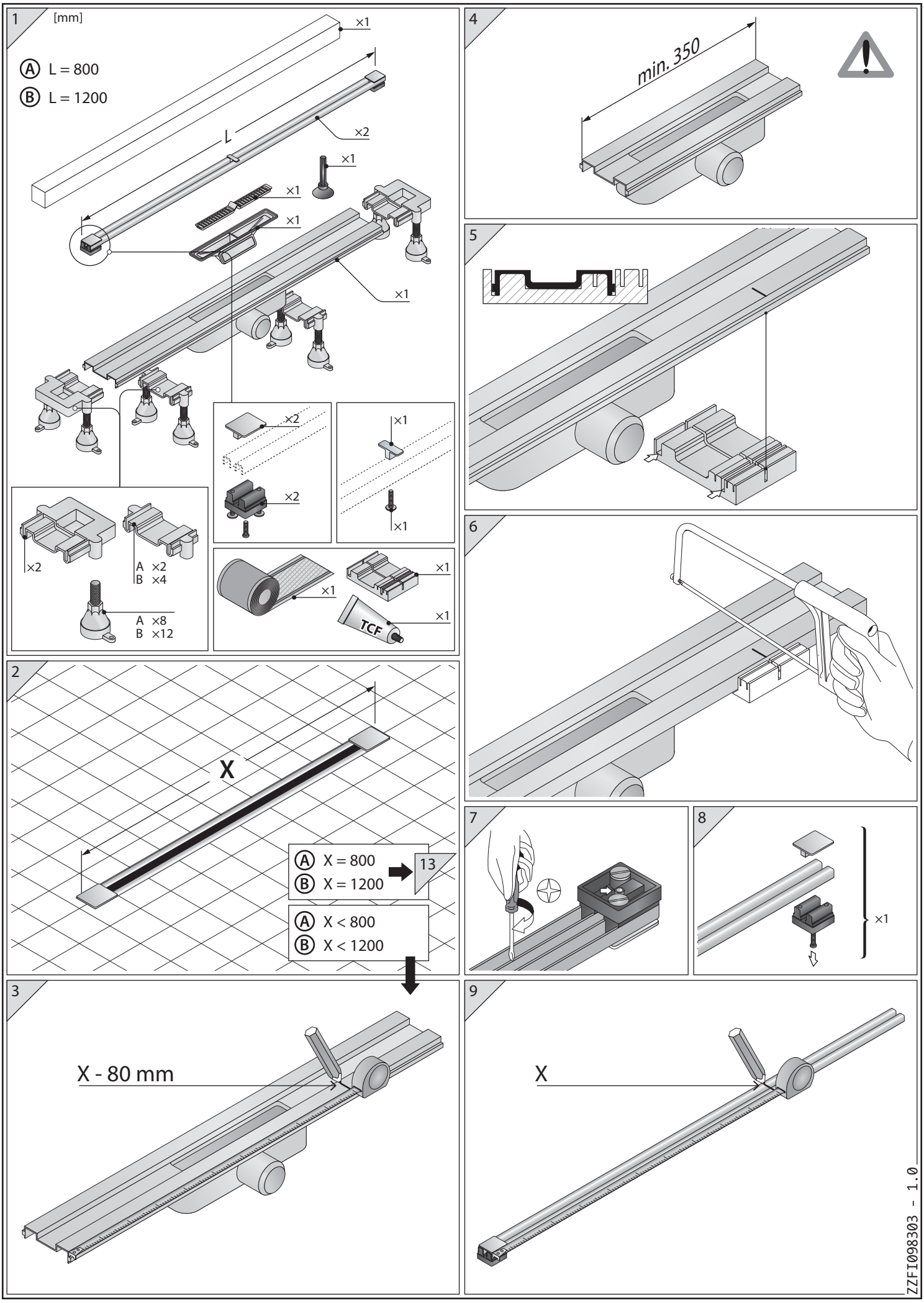
1
[mm]
Ⓐ L = 800
Ⓑ L = 1200
L
×1
×2
×1
×1
×1
×1
×2
×2
×1
×1
×2
A ×2
B ×4
A ×8
B ×12
×1
×1
×1
TCF
2
X
Ⓐ X = 800
Ⓑ X = 1200
13
Ⓐ X < 800
Ⓑ X < 1200
3
X - 80 mm
4
min. 350
5
6
7
8
×1
9
X
ZZFI098303 - 1.0

10

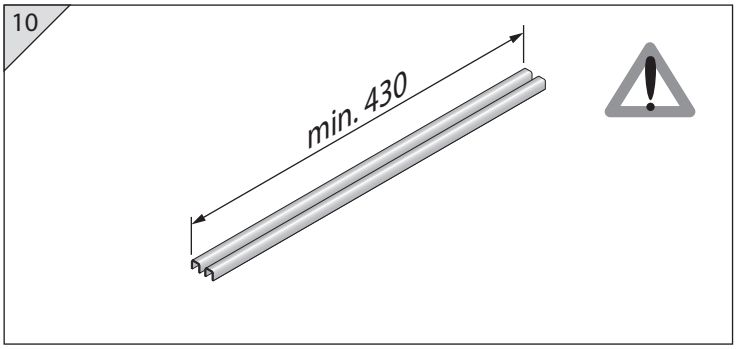

11

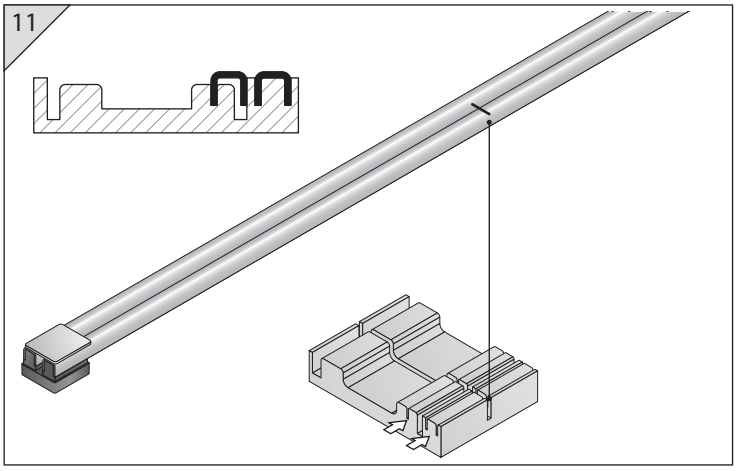

12

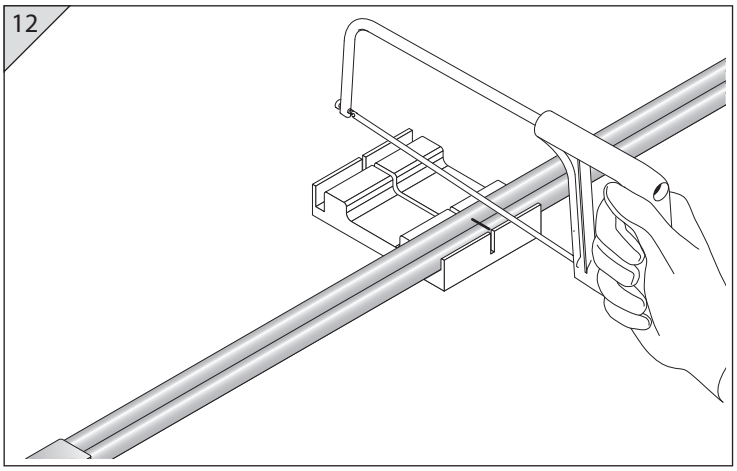

13

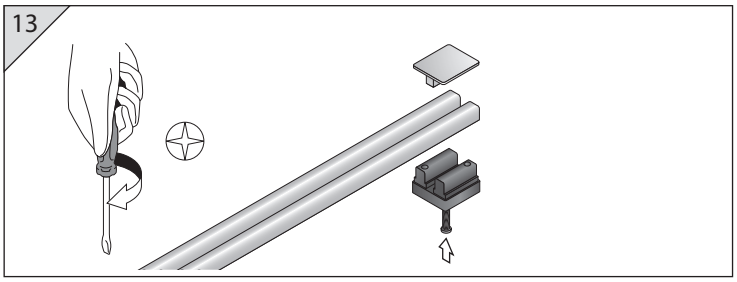

14

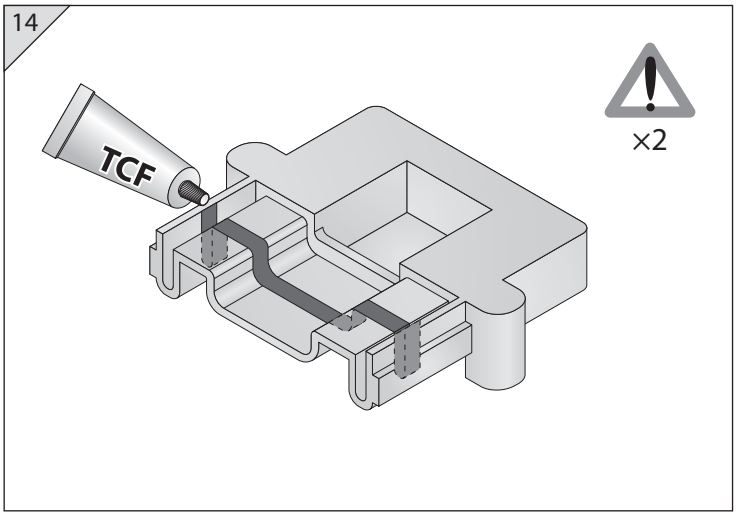

15

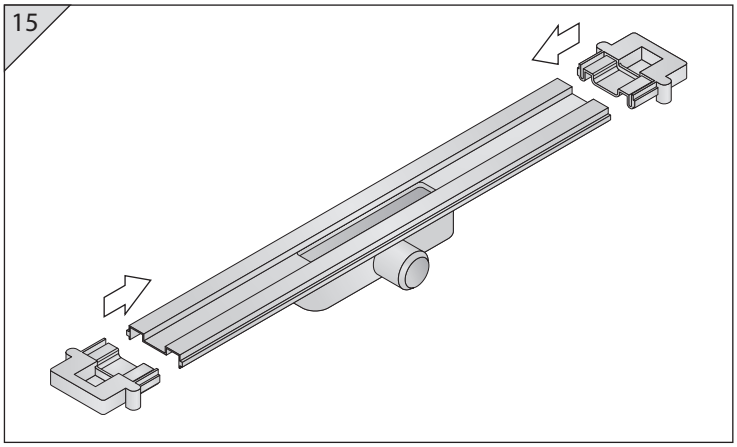

16

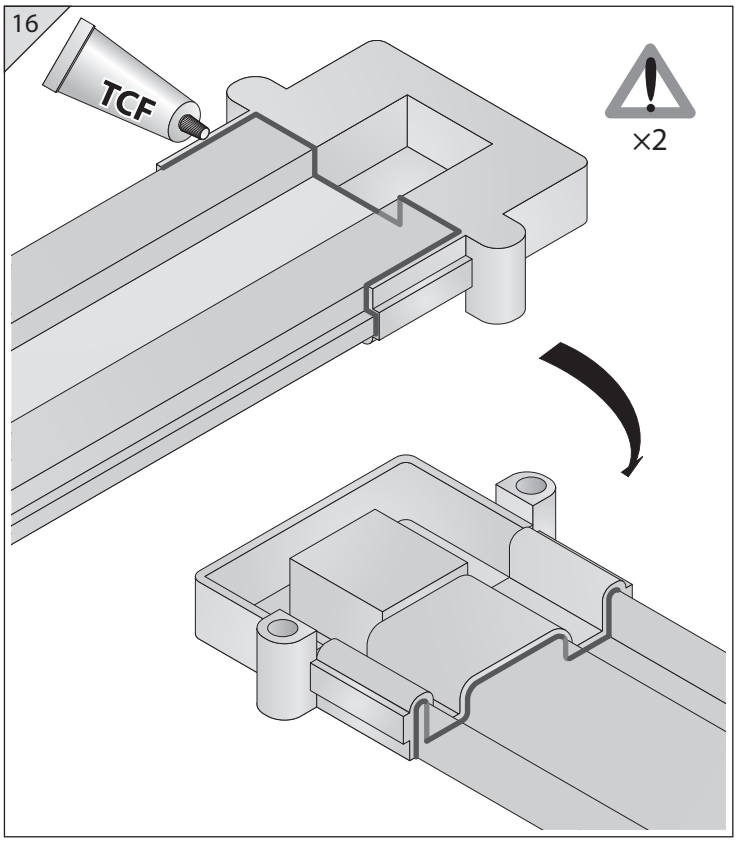

17

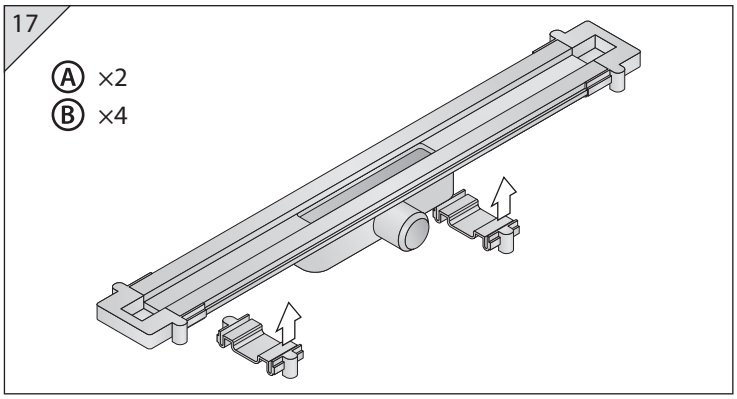

18

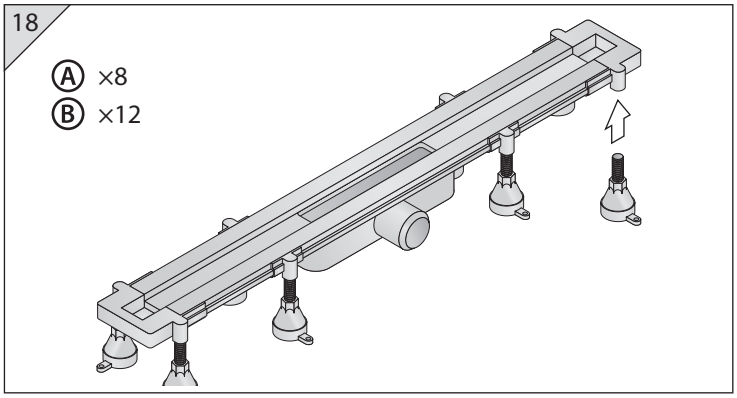

19

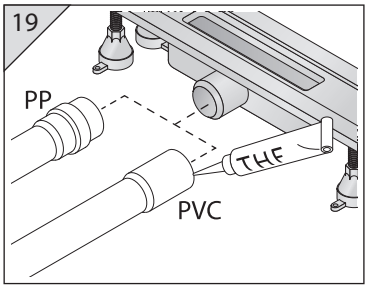

20

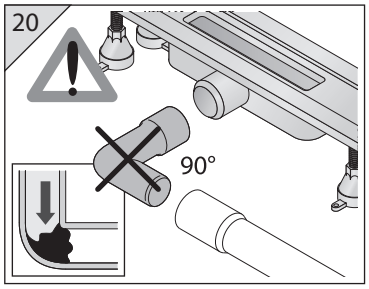

21

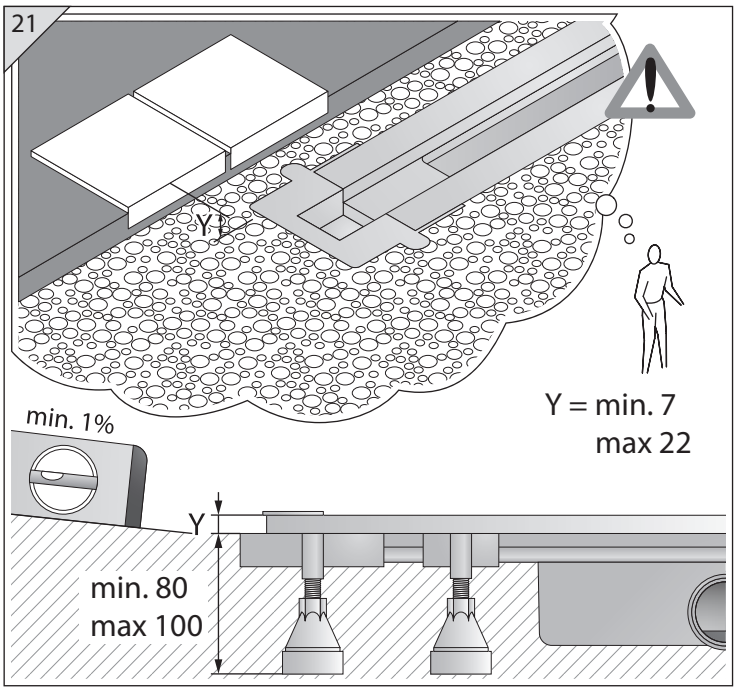

22

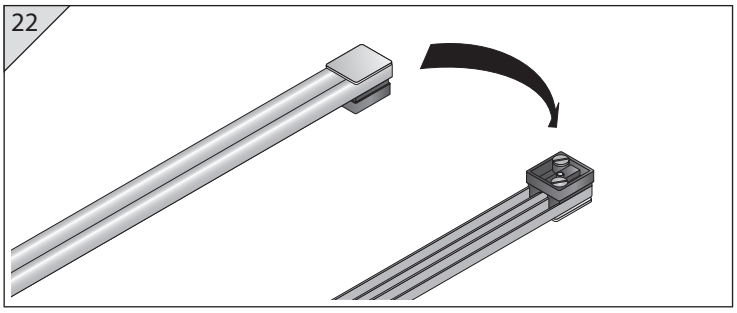

23

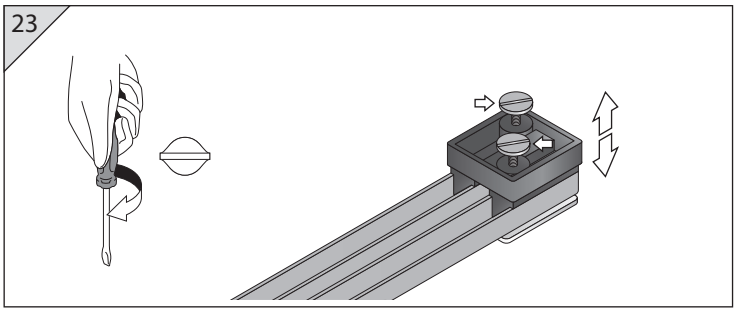

24

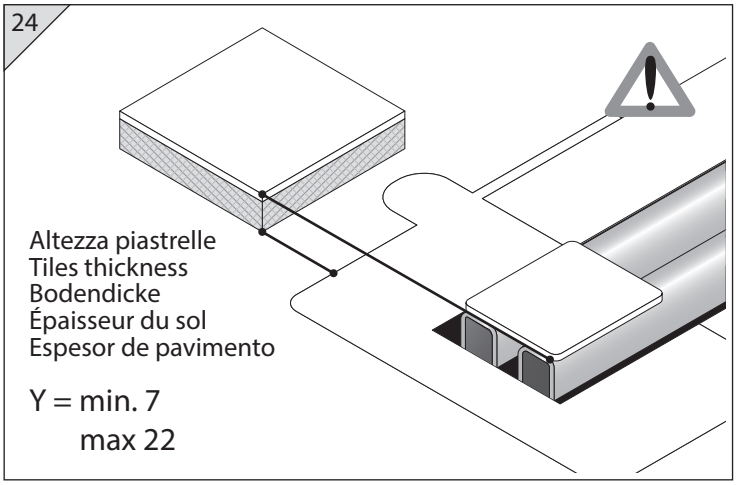

25

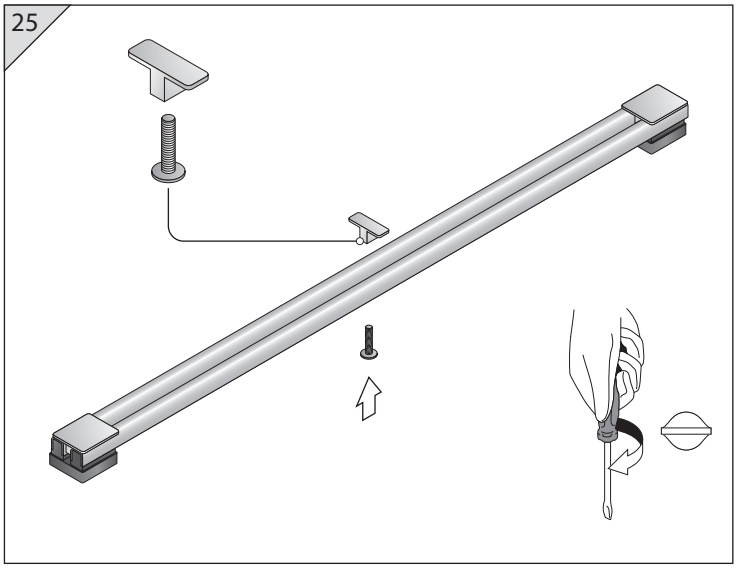

26

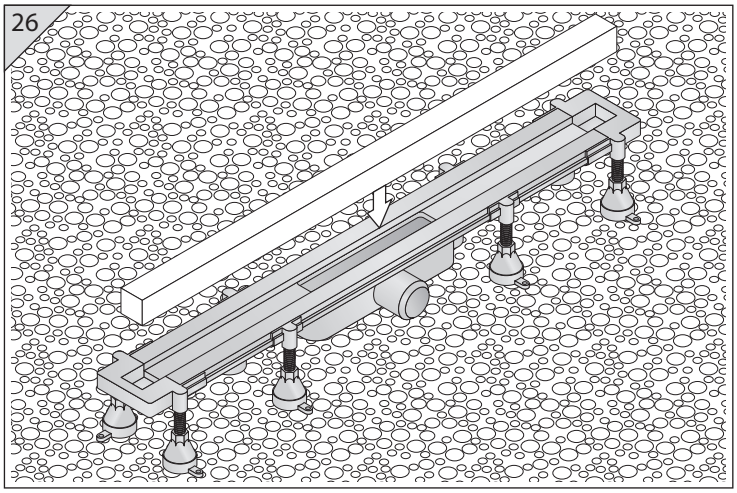

27

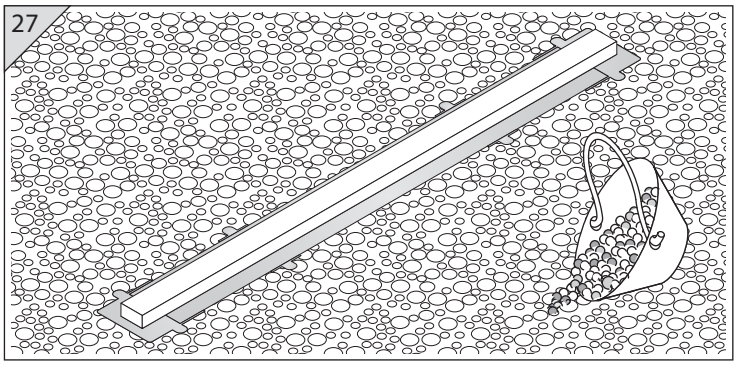

28

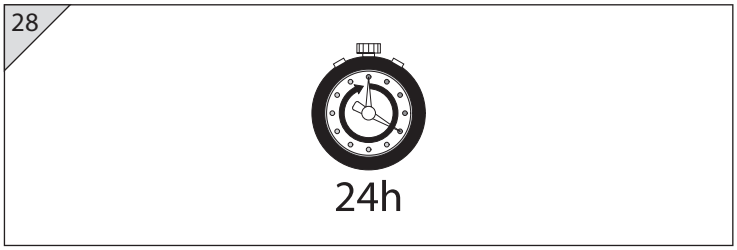

29

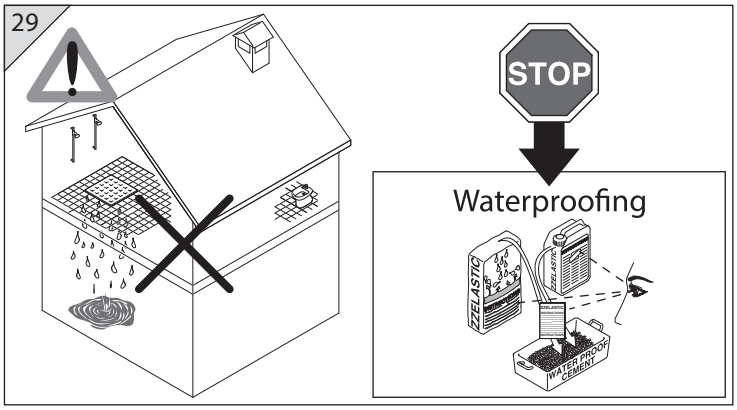

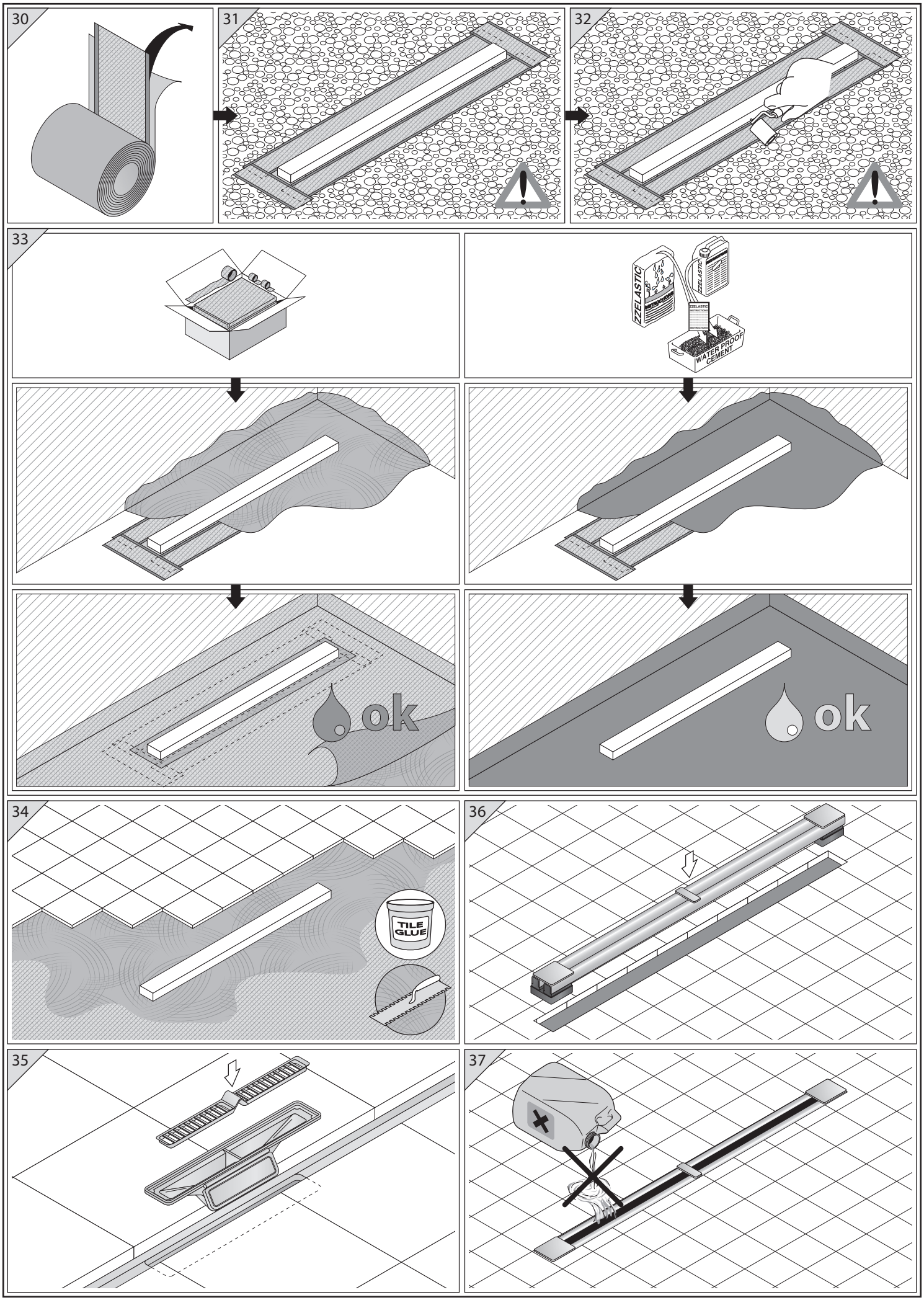
30
31
32
33
ZZELASTIC
WATER PROOF CEMENT
ok
ok
34
TILE GLUE
36
35
37